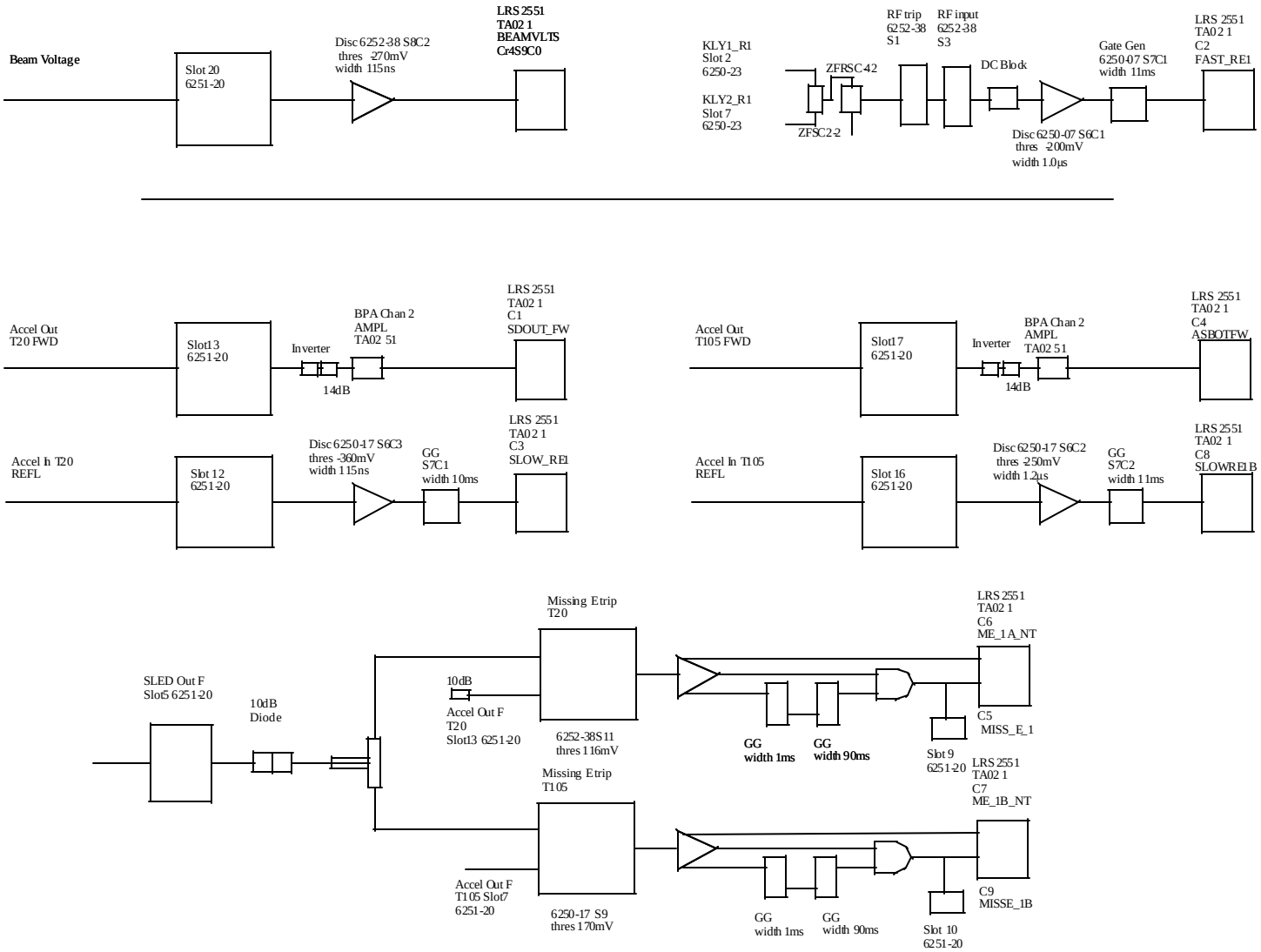

Pulse and Fault counters
NLCTA
March 16, 2001
Marc Ross