SIMPLIFIED BSOIC SYSTEM DIAGRAM (ASTA)

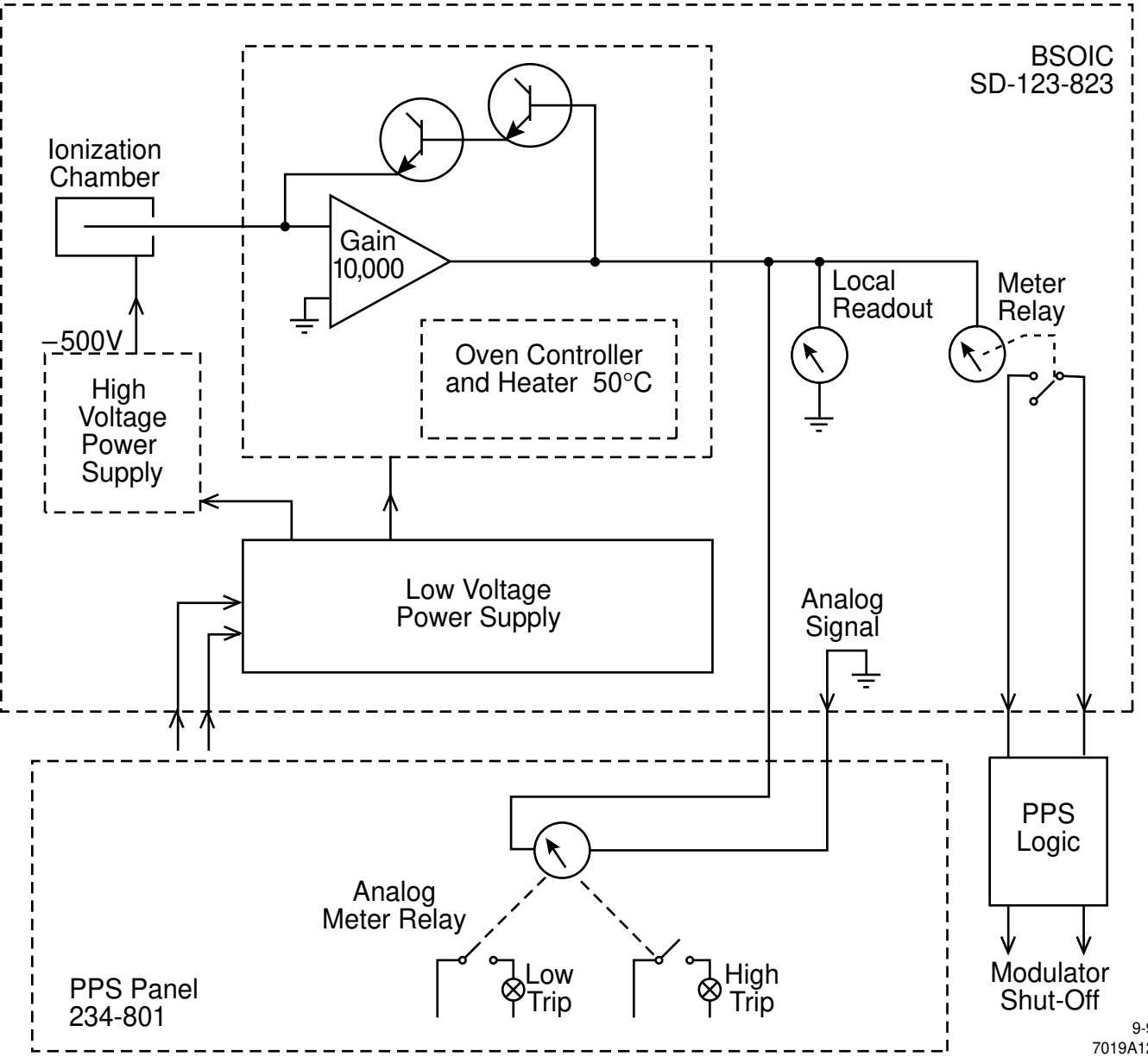

9-94
7019A126