PF-236-406-51-RO D

REV.	DESCRIPTION	DRN.	CHK	APP.	DATE

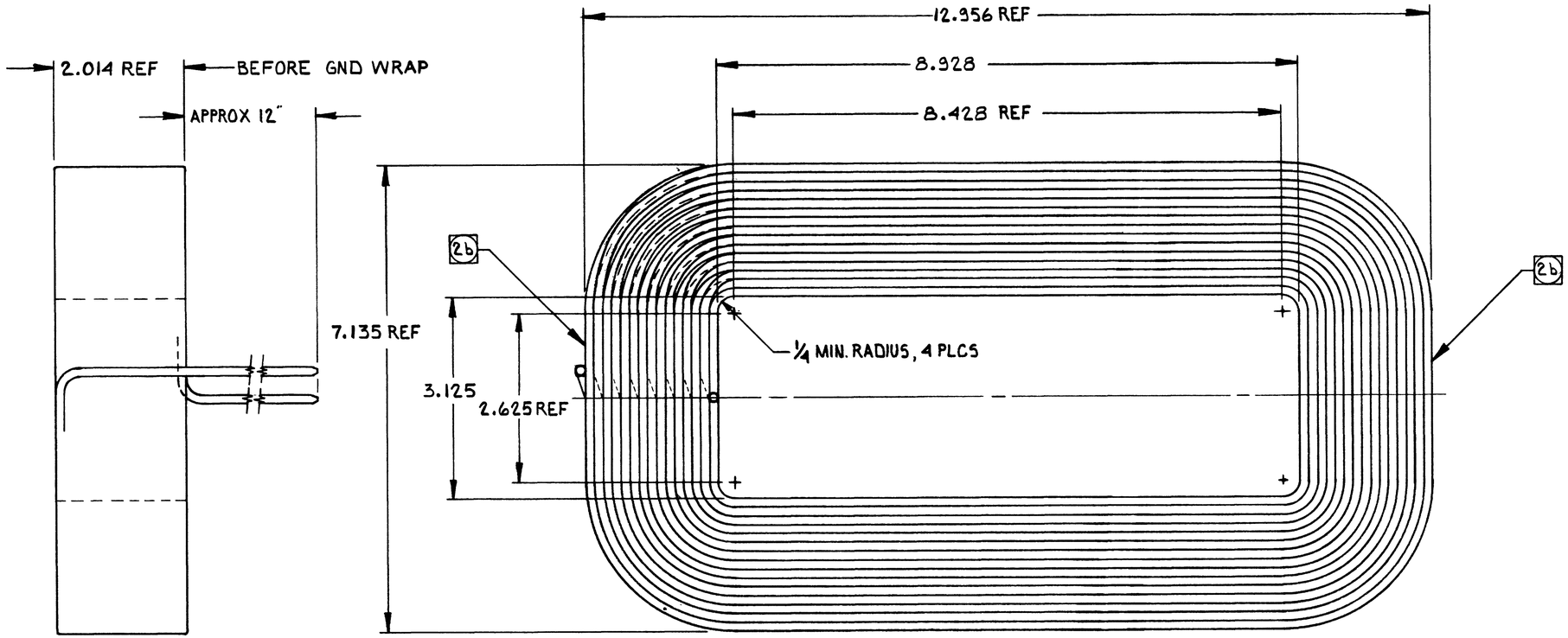

NOTES: UNLESS OTHERWISE SPECIFIED

1. CONDUCTOR: #10 AWG ROUND .106 MAX. DIA. OVER HEAVY FILM INSULATION.
   APPROX. LENGHT PER COIL = 860 FEET
   TOTAL TURNS PER LAYER = 18
   NUMBER OF LAYERS = 19
   WEIGHT OF COIL AND EPOXY = 28 LB'S
2. INSULATION OF COIL:
   a. ADD EPOXY TO COIL TO FILL ALL GAPS AND VOIDS.
   b. WRAP COIL WITH 2 LAYERS OF FIBER-GLASS EPOXY TAPE AS SHOWN.
3. NEXT ASSEMBLY:
   SA-236-406-50
   SA-236-406-30

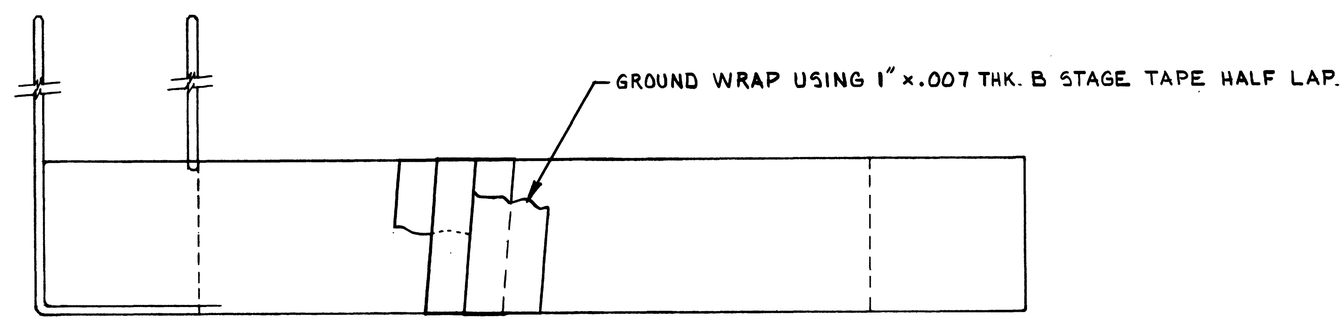

ITEM NO.	PREFIX	BASE	SUFFIX	TITLE OR DESCRIPTION	QTY.
	STOCK OR PART NO.				
	DO NOT SCALE DRAWING			NEXT ASSEMBLY: SEE NOTE 3	

UNLESS OTHERWISE SPECIFIED DIMENSIONS ARE IN INCHES.
TOLERANCES:
BREAK EDGES .005-.015
INTERNAL CORNERS .015 R MAX
FRACTIONS ± 1/64
DEC. .x —
.xx ±.01
.xxx ±.005
ANGLES ±0°-15' ALL SURFS. ✓

SCALE: 1:1

STANFORD LINEAR ACCELERATOR CENTER
U. S. DEPARTMENT OF ENERGY
STANFORD UNIVERSITY STANFORD CALIFORNIA

PROPRIETARY DATA OF STANFORD UNIVERSITY AND/OR U. S. DEPARTMENT OF ENERGY. RECIPIENT SHALL NOT PUBLISH THE INFORMATION WITHIN UNLESS GRANTED SPECIFIC PERMISSION OF STANFORD UNIVERSITY.

ENGR. Bill Brunk 9-27-85 DATE
DFTS. Sampson T. White 9-27-85
CHK'D. WOB 9/30/85
APPROVALS Wol Brunk 9/30/85

S.L.C. LINAC TO ARC MATCH STEERING 3D8.8 MK II MAGNET COIL

PF 236-406-51-RO D

SH 1 OF 1

M/F RO