REV.	DESCRIPTION	DRN	CHK	APP	DATE
R1	ITEM 2 WAS: PF-236-406-03	DM 12/14/92	BS 12/17/92	12/21/92	—

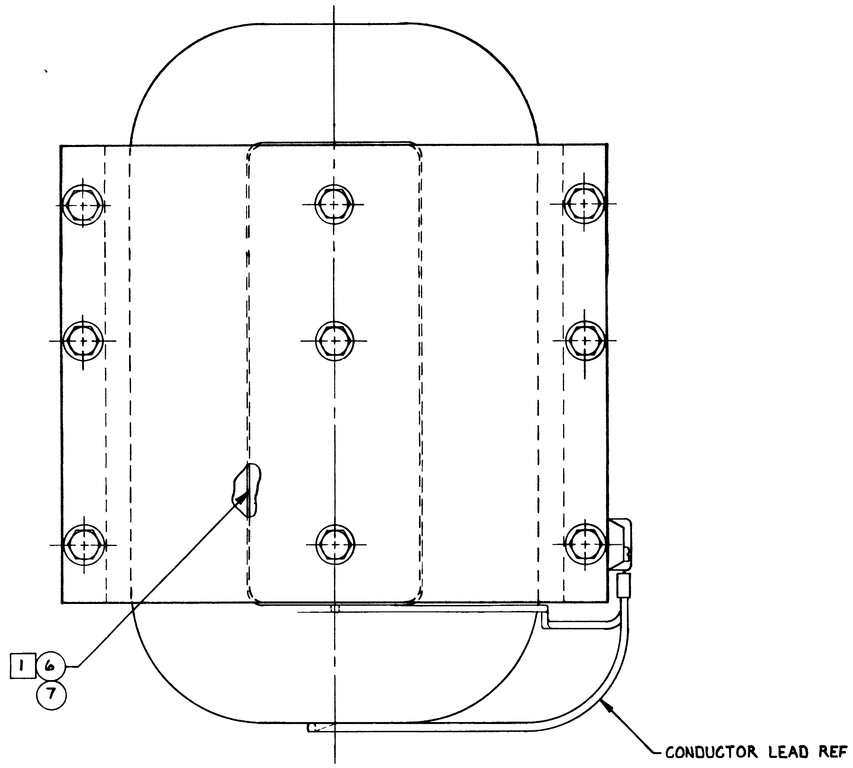

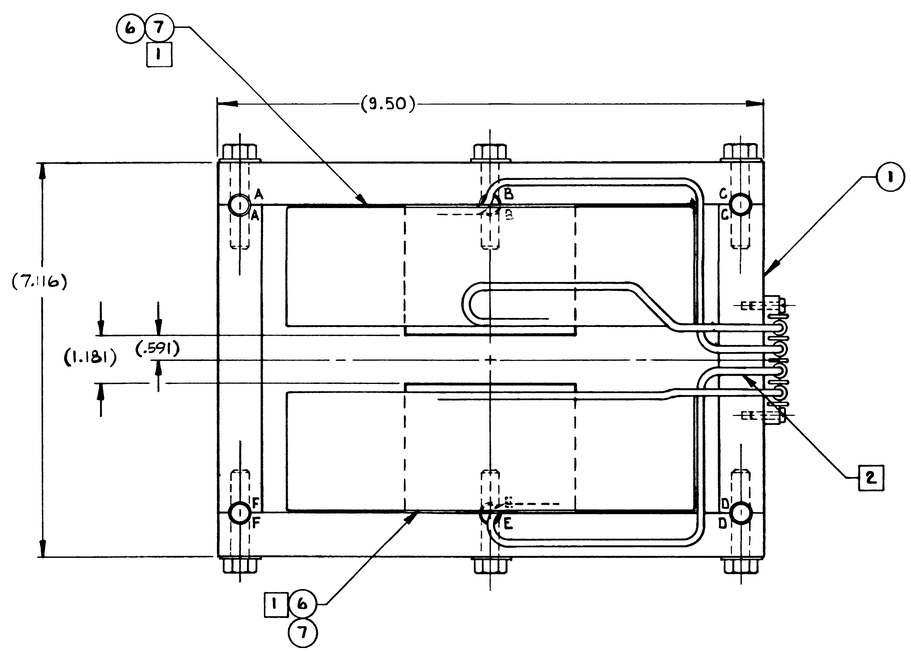

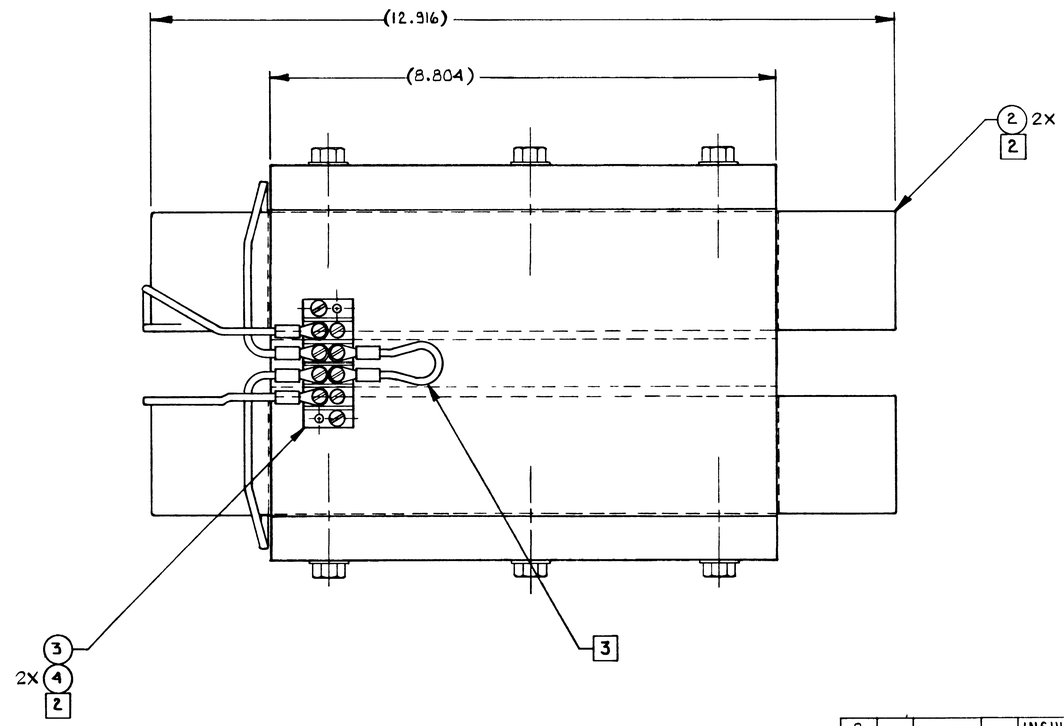

NOTES: UNLESS OTHERWISE SPECIFIED

1. INSTALL DMD ITEM 6 AND EPOXY ITEM 7 BETWEEN CORE AND COIL.
2. BEND CONDUCTOR LEADS FROM COILS AS SHOWN TO CONNECT TO TERMINAL BLOCK ITEM 3. CUT OFF EXCESS. (SAVE EXCESS FOR JUMPER) SLIP ON INSULATION SLEEVING ITEM 8 APPROX. 3" LONG AND SOFT SOLDER LUGS ITEM 5 TO THE ENDS OF THE CONDUCTOR LEADS. CONNECT TO TERMINAL BLOCK AS SHOWN.
3. USE EXCESS CONDUCTOR LEAD FROM NOTE 2 TO MAKE A JUMPER. SOFT SOLDER LUG ITEM 5 TO ONE END OF THE CONDUCTOR LEAD SLIP ON INSULATION SLEEVING ITEM 8 AND SOFT SOLDER LUG ITEM 5 TO THE OTHER END OF THE CONDUCTOR LEAD. JUMPER IS USED TO CONNECT THE INSIDE CONDUCTOR LEADS OF BOTH COILS AS SHOWN.

ITEM NO	PREFIX	BASE	SUFFIX	TITLE OR DESCRIPTION	QTY
8				INSULATION SLEEVING	AR
7				EPOXY	AR
6				DMD .020 THK	AR
5	59	294-711	41	LUG	6
4	53	267-011	07	SCREW PAN HD 6-32 × ½" LONG	2
3	59	294-604	04	TERMINAL BLOCK 15AMP, 4 TERM	1
2	PF	236-406	51	COIL	2
1	SA	234-309	76	CORE ASSEMBLY	1

STOCK OR PART NO

NEXT ASSEMBLY ID234-304-06,07,11,12,16,17

FFTB MECH STEER MAG MKIII ASSY

UNLESS OTHERWISE SPECIFIED
DIMENSIONS ARE IN INCHES
TOLERANCES
BREAK EDGES .005-.015
INTERNAL CORNERS .015 R MAX
FRACTIONS ±
DEC. .X
.XX
.XXX
ANGLES ± ALL SURFS ✓

SCALE 1:1

DO NOT SCALE DRAWING

STANFORD LINEAR ACCELERATOR CENTER
U. S. DEPARTMENT OF ENERGY
STANFORD UNIVERSITY STANFORD CALIFORNIA

PROPRIETARY DATA OF STANFORD UNIVERSITY AND/OR U. S. DEPARTMENT OF ENERGY. RECIPIENT SHALL NOT PUBLISH THE INFORMATION WITHIN UNLESS GRANTED SPECIFIC PERMISSION OF STANFORD UNIVERSITY

DRWN D. WALZ DATE
DFTS. G. DIMAGGIO 5/23/91
CHKD. B. ASA 6/14/91
APPD. 6-7-91 6/14/91

FFTB MECHANICAL STEERING MAGNET 3D8.8 MK III ASSEMBLY

AD 234-309-75-R1 E

SH 1 OF 1

M/F R1

AD-234-309-75-R1 E