REV	DESCRIPTION	DWN	CHKR	APVD	DATE

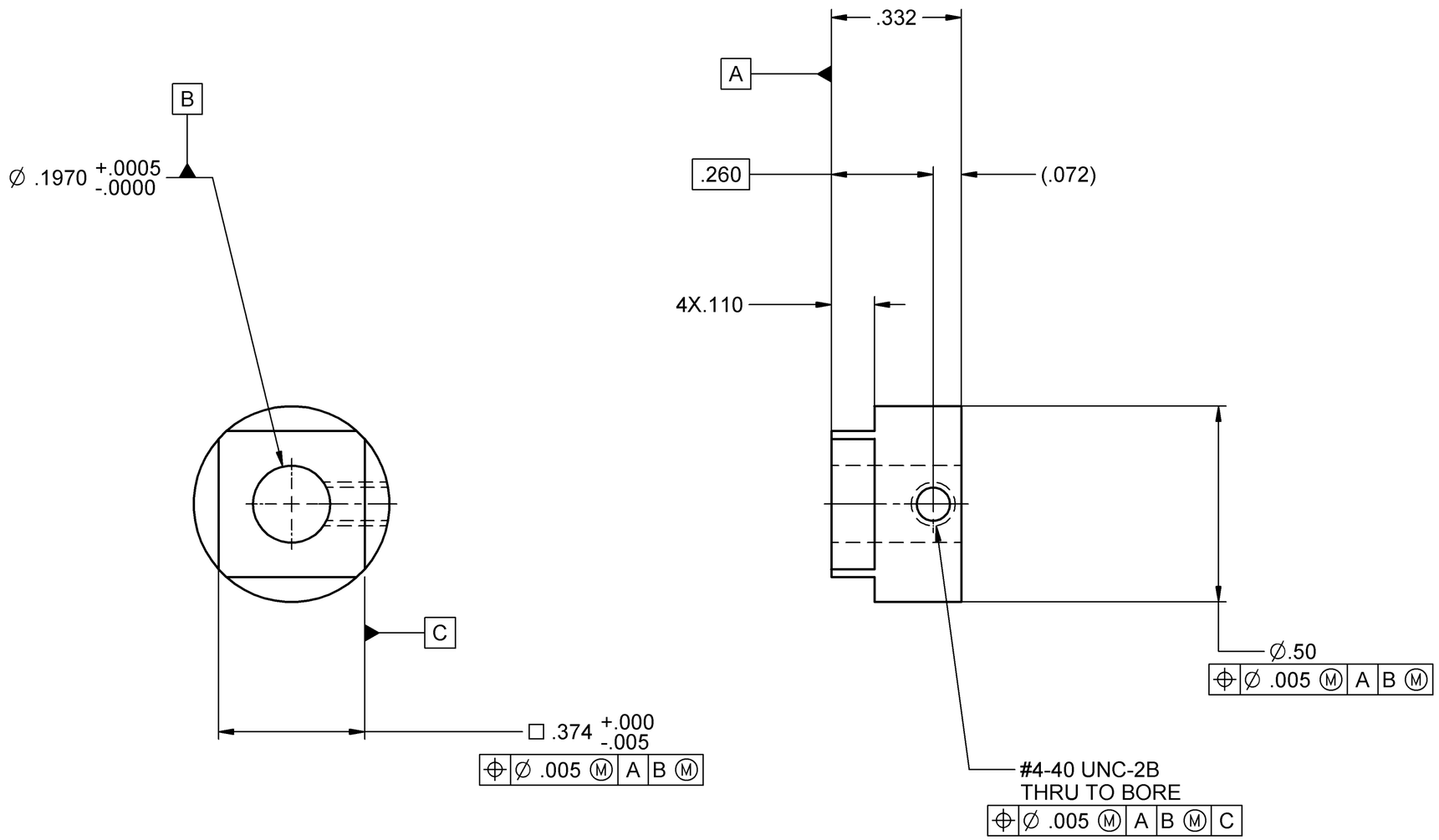

NOTES:

1. BAG AND TAG WITH PART NUMBER.
2. ALODYNE COAT WITH CHEMICAL FILM PER MIL-C-5541, CLASS 3.

STOCK NO	MATERIAL DESCRIPTION
	AL 6061-T6511

SA-380-705-50
NEXT ASSEMBLIES:

DIMENSIONING AND TOLERANCING IS IN ACCORDANCE WITH ASME Y14.5M-1994.

UNLESS OTHERWISE SPECIFIED
DIMENSIONS ARE IN INCHES.
TOLERANCES:
BREAK EDGES .005-.015
INTERNAL CORNERS R.015 MAX
FRACTIONS ± ---
DEC .XX ± .01
.XXX ± .005
.XXXX ± ---
ANGLE ± ---
64 ALL SURF

SCALE: 4:1

DO NOT SCALE DRAWING

CAD FILE NAME: pf38070551-0.dft

STANFORD LINEAR ACCELERATOR CENTER
U.S. DEPARTMENT OF ENERGY
STANFORD UNIVERSITY STANFORD, CALIFORNIA

PROPRIETARY DATA OF STANFORD UNIVERSITY AND/OR U. S. DEPARTMENT OF ENERGY. RECIPIENT SHALL NOT PUBLISH THE INFORMATION WITHIN UNLESS GRANTED SPECIFIC PERMISSION OF STANFORD UNIVERSITY.

		DATE	APPROVALS
ENGR	G. BOWDEN		G. BOWDEN
DWN	H. ATILES	6-30-05	---
CHKR	G. BOWDEN		---

LCLS MECHANICAL SYSTEMS SMALL RLR CAM POSITIONER BRAKE HUB, MOD

DRAWING NUMBER: PF-380-705-51
REVISION NUMBER: 0
C

SH 1 OF 1

PF-380-705-51 0 C

LCLS MECH SM CM PSNR BK HUB