Active Mover Using Air-Spring and MLRB

Shigeru Takeda, Kikuo Kudo, Atsuyoshi Akiyama, Hiroshi Matsumoto, Tsumoru Shintake,
Masakazu Yoshioka and Yasunori Takeuchi
KEK, High Energy Accelerator Research Organization
Oho Tsukuba-shi, Ibaraki-ken 305, Japan
Yasunori Kanazawa
ATC Co. Ltd.
Namiki-cho, Hachioji, Tokyo 193, Japan
Nobuyoshi Murai and Tamio Imazawa
Technical Research Laboratory, Takenaka Corporation
Ohtsuka Inzai, Chiba-ken 270-13, Japan
Masashi Yasuda
Tokkyokiki Corporation
Minami-Hatsushima, Amagasaki-shi, Hyogo-ken 660, Japan

1. INTRODUCTION

The next generation linear colliders should have extremely small emittance in order to achieve sufficiently high luminosity. Owing to the very small beam sizes of some ten nanometers height at the interaction point, these machines are very sensitive to the ground motion leading to uncorrelated machine component disorder. Precise alignment of the machine components is essential to prevent emittance dilution.

Hardware R&D on the C-band (5712 MHz) RF-system for the electron/positron linear collider started in 1996 at KEK. The progresses have been reported in the international conferences [1]. In this paper, we will report the design of the girder for the accelerating structures and an active mover, which supports the girder. The diffusive ground motion spoils alignment of accelerator elements. In order to compensate the slow ground motion, an active supporting mover was developed using new idea. We are undertaking to test the quality for long term use of the mover. Our new mover is composed of an air spring and a Multi-Layer-Rubber-Bearing (MLRB) as shown in Figure 2. The air spring gives smooth and fine control comparing with the mechanical jack. We use MLRB to prevent fast popping motion of the supporting table induced by earthquake. Detailed design and characteristics of the mover are shown with LON control system [2, 3].

2. GROUND MOTION ISSUES

The natural ground motion in the frequency range of seismic vibration is mostly coherent in the range of beta function for the related accelerator. The incoherent diffusive or Brownian like motion, however, may become dominant at frequency region less than seismic vibration. Shiltsev reviewed many studies of ground motion and discussed about the diffusive motion [4]. Sery discussed the ground motion focusing on the effects to the main linac of linear collider [5]. The power spectrum and the spatial correlation of the ground motion in the low frequenc y $f < 0.1$ Hz

are explained by ATL model [5], [6]. The elastic motion (produced by the moon and sun, for example) is also dominant here like the motion in the band $f > 0.1$ Hz, but the inelastic or diffusive motion becomes bigger in the low frequency region. This inelastic motion is probably fed by the elastic motion and its dissipation process. This phenomenon is describable by the ATL model. The model says that the relative rms displacement after a time T of the two points separated by a distance L is $\langle x^2 \rangle = ATL$. The parameter A is a constant which value is found to be $A \approx 10^2 \sim 10^{-2}$ nm^2/sec/m depending on the sites. This parameter A should depend mainly on the ground properties provided that A is connected with dissipation of the elastic motion, since the sources of elastic motion are the same for all places. Takeda et al. showed that the parameter A is smaller in tunnels built in solid rock and it also depends on the method of tunnel construction. In this case the fragmentation of the rock is increased artificially by use of explosions during construction, and the parameter A is found to be 5 times larger than the construction without dynamite [6].

It is possible that some human produced noises are dominant in the frequency band $f > 1$ Hz. These noises are usually depending on the local conditions and dominating over the natural ground motion noises. In the case of operating accelerator tunnel, the measured power spectrum shows high amplitudes in the frequency region $f > 1$ Hz due to the vibration generated by related accelerator devices, cooling water pressure fluctuations, air conditioner and other things. Traffic around the sites also becomes the source of noises. These vibrating noises, being generated by different origins around the accelerator, show big amplitude and bad spatial correlation in the high frequency region. The vibration study of SLC shows that the beam-based compensating method fails in the frequency region beyond $f_{rep}/6$ and leads to reasonable damping only below about $f_{rep}/25$ [7]. This result means that the beam-based method is applicable for low frequency distortions and that we have to develop different compensation scheme. A simple possible solution consists of a passive vibration absorber with resonant frequency being well below the lowest frequency to be compensated. For acquiring good reduction of the uncorrelated noises, the passive absorber must be directly attached to the devices generating the noise.

In order to specify the effect of ground motion, the relative blow-up of the beam was obtained on the typical linear collider linacs as shown in Table 1, using $A = 1$ nm^2/m/sec for ATL coefficient [6]. The duration time t for the emittance blow-up remaining within an amount $\in = 1$ is given in the following Table 1.

Table 1 Parameters of typical linear collider linacs

		X-band	C-band	
Beam Energy Entrance/Exit	E0/E1	10/500	10/500	GeV
Particles/bunch	N	0.8	1.0	10^{10}
Invariant Emittance	e_{N_y}	30	30	nm
Bunch length	s_z	80	200	μm
b at entrance	b_0	4	4	m
Rf frequency	f	11.4	5.7	GHz
Accel. gradient	dE/ds	45	32	MeV/m
Iris radius/wavelength	a/l	0.16	0.14	
ATL coefficient	A	1	1	nm^2/s/m
Stable time for $\in$ =0.1	t	3	24	hours

The linear collider requires a very low mechanical tolerance for quadrupole magnets in the main linacs. Typical rms values of vertical vibration are below 20 nm for frequencies beyond 1 Hz (C-band linear colliders) or 5 nm for frequencies beyond 10 Hz (X-band), respectively.

3. DESIGN OF ACTIVE GIRDER

An e^+e^- linear collider is a large-scale machine. In the main linacs for two beams, we use more than 8,000 accelerating structures for the 500 GeV linear collider of C-band and their alignment tolerance is about 30 μm/structure [8]. The girder must meet the following demands:

(1) Simple structure,
(2) High reliability,
(3) Easy to control,
(4) Lower production cost.

These guidelines contain important boundary conditions to the design of the girder and its active mover. Our girder is designed to support four accelerating structures. The length of each structure is 1.8 m, and then the girder is about 8 m in length as shown in the illustration of Figure 1. In this figure, X, Y and Z axes are defined with the beam direction of Z. We utilize a concrete pile for the girder. Three movable legs and three movable arms support the girder. Each leg consists of an air-spring-jack driven by compressed air as a fine mover and a wedge jack adjuster as a coarse mover. The fundamentals of the structure are shown in Figure 1. In order to damp longitudinal and transversal vibration, the leg includes MLRBs for each direction. The main purpose of this leg is to control smoothly the level of the girder and to cancel the effect of local change on the alignment. The arm as a horizontal mover has almost similar structure to the leg without MLRBs to the Y direction.

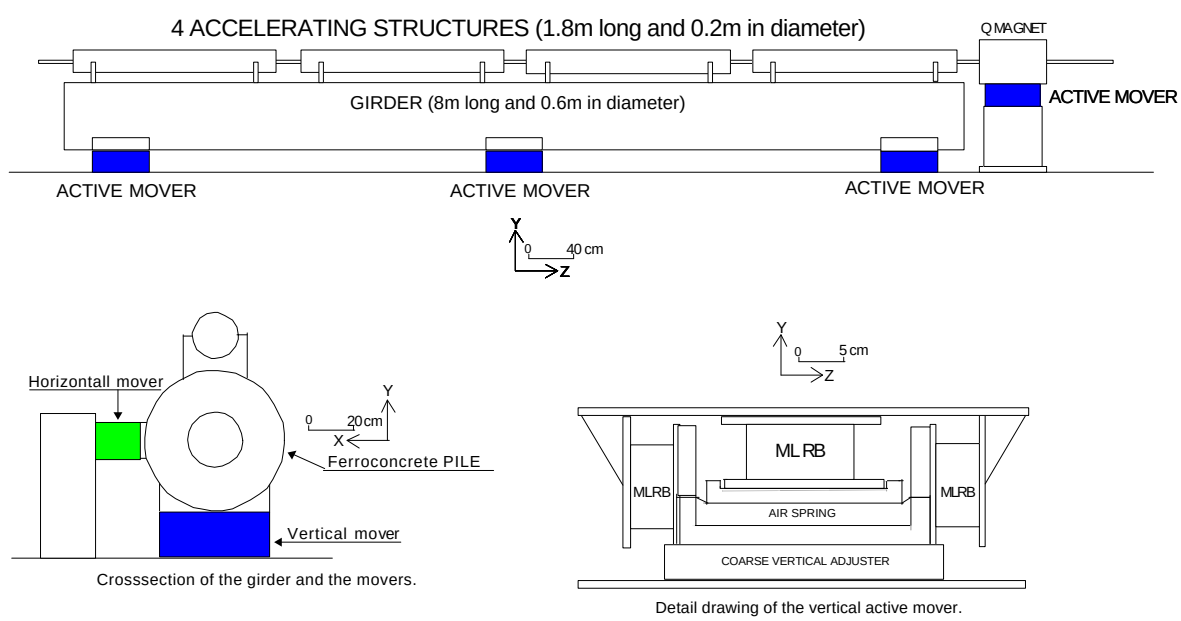

Fig. 1 Active controllable support for C-band accelerating structures.

4. R&D ON THE ACTIVE MOVER

4.1 Structure of the mover

In order to compensate the slow ground motion, an active supporting mover was developed using new idea. We made four active movers to study applicability of the air spring and the MLRB. Figure 2 shows the detail of the active mover and Table 2 shows the specification. We are undertaking to test the quality for long term use of the mover. The present mover is composed of an air spring and a MLRB as shown in Figure 2. The air spring gives smooth and fine control comparing with the mechanical jack. We use MLRB to prevent fast popping motion of the supporting table induced by earthquake. Applicability of the air spring as the actuator was studied using this trial mover. Adaptability of the MLRB as the damper was also investigated.

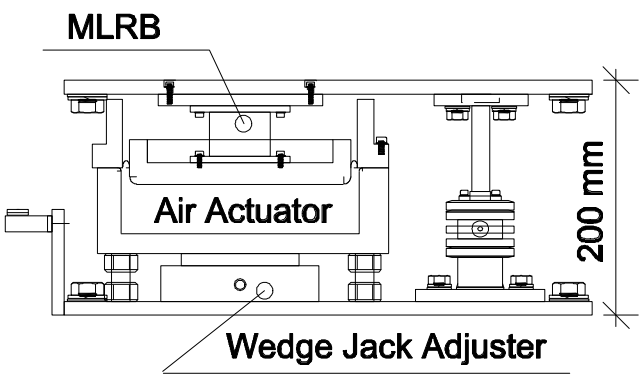

Fig. 2 Active mover.

Table 2 Main parameters of the mover.

Load capacity	750 kg
Size	450(L)x300(W) x200(H)mm^3
Dynamic range	5 mm
Weight	65 kg
Spring constant	
MLRB (H)	3.92x10^2 kg/sec^2
MLRB (V)	3.23x10^5 kg/sec^2
Number of MLRB layer	50
Diameter of the actuator	200 mm
Volume of the actuator	1,300 cc

4.2 Test of the air-spring

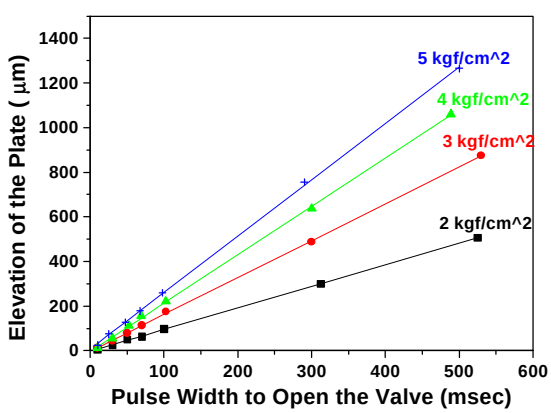

Fig. 3 Test result of the air-spring down

We examined how the movers elevate in the direction of the vertical axis. A total weight of 1,400 kg was placed on a steel plate, which was fixed on the top of four movers. Figure 3 shows a result of the elevation characteristics as a function of pulse width for the valve operation and of pneumatic pressure supplied to the air springs. This figure says that the elevation of the plate is proportional to the pulse width of controlling valve. We can say that utilization of the diaphragm with high stiffness offers a suitable actuator to the active mover, which is required smooth controllability.

Good regression coefficient for the up/down control of the plate ($\cong 1.08$) is obtained for 2 kgf/cm^2 of supplied pneumatic pressure. The regression coefficient increases slightly by the pneumatic pressure increase.

4.3 Frequency response of the mover

Frequency response of the mover was observed using two wide band seismometers. Figure 4 shows schematically an experimental setup. One of the seismometers is set on the floor and the other on the surface of the stage. We use the natural ground motion as an input signal to this system.

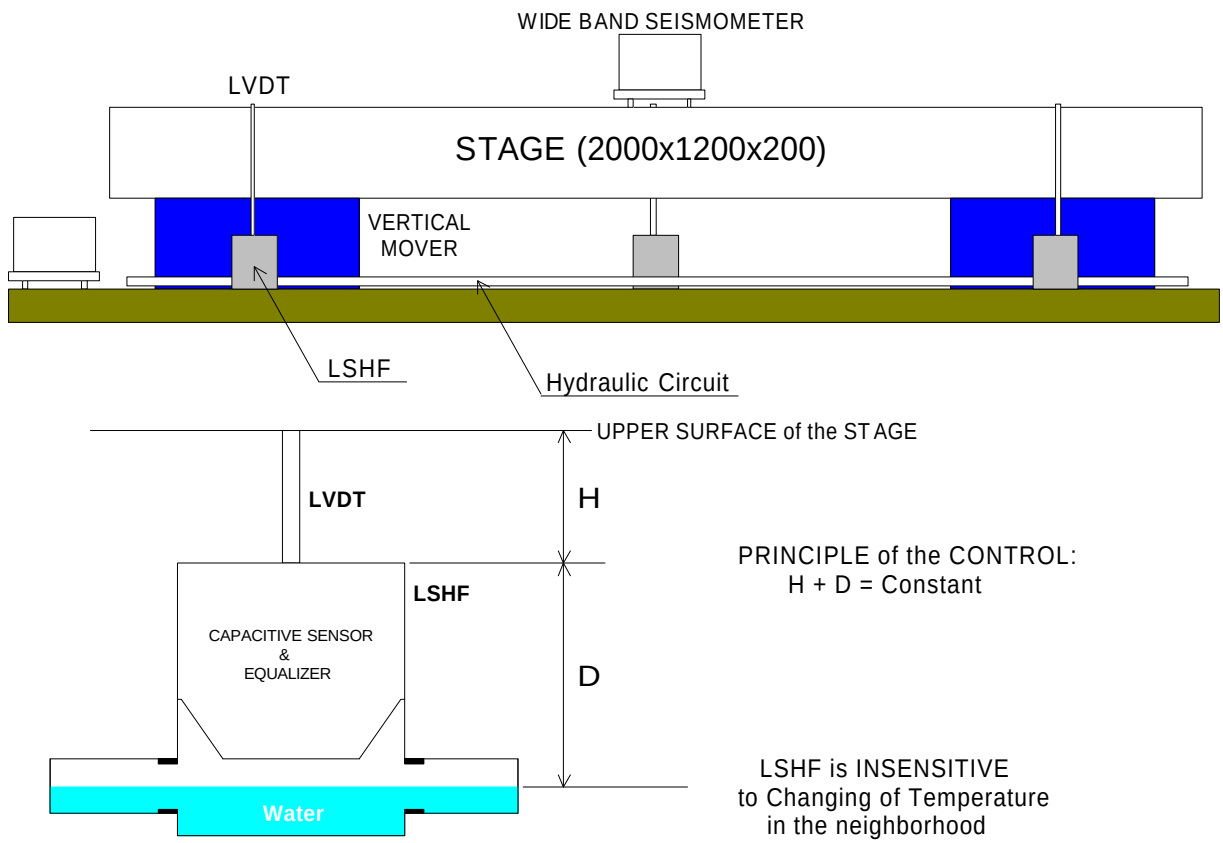

Fig. 4 Schematic illustration of the experimental setup.

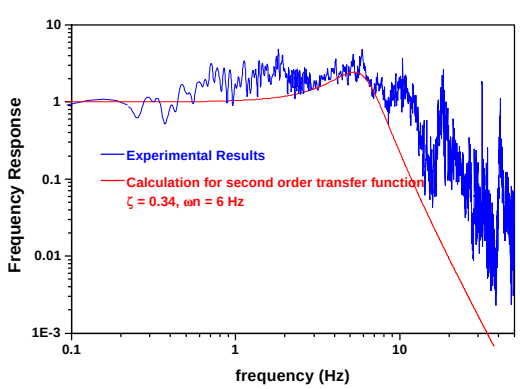

Fig. 5 Vertical frequency response.

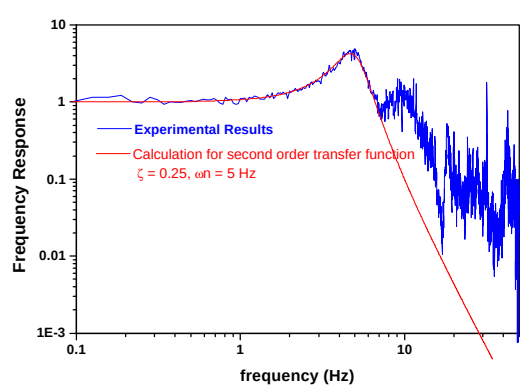

Fig. 6 Horizontal frequency response.

Figure 5 shows frequency responses on the vertical direction. Resonant frequency is about 6 Hz and the damping factor 0.34. Figure 6 shows frequency responses on the horizontal direction. Resonant frequency is about 5 Hz and the damping factor 0.25. Higher harmonics (10, 20 and 40 Hz) are found in the horizontal data. The vertical data shows slightly complex response in the frequency region f < 6 Hz through coupling with horizontal motion. This coupling motion will be damped by installation of horizontal MLRB, as speculated by Figure 6.

4.4 Controller of the mover

We developed a feedback control system using Local Operating Network (LON). LON was developed by the Echelon Corporation and it is an intelligent distributed type network control system. The VLSI device, which is the center of LON, is called a NEURON CHIP. This chip has 8-bit CPU of three pipeline types, 11 programmable I/O pins and a port for the network communication with maximum transmission speed 1.25 Mbit/sec. As the network protocol, it is available to use LONTALK fitted in with the ISO OSI standard model. The application program is using the C language. User program is written in ROM with the firmware.

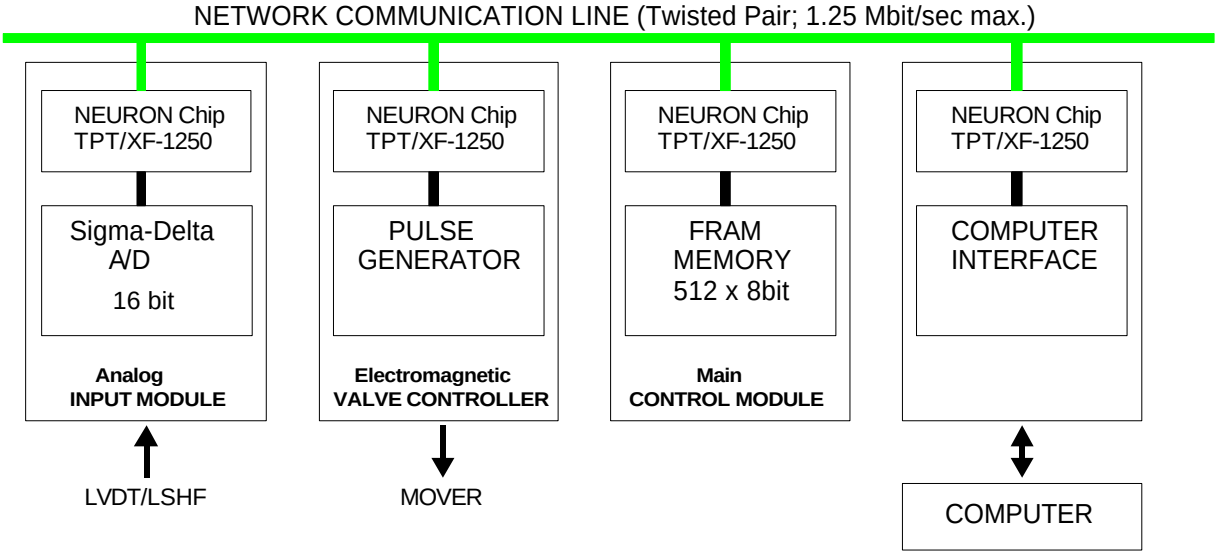

Fig. 7 Block diagram of control system using LON.

We developed three kinds of module, Analog Input Module (AIM), Valve Control Module (VCM) and Computer Interface Module (CIM). The main control module, as shown in Figure 7, is included in the module of VCM. AIM is composed of 16 bit A/D chip being sigma-delta type and twisted-pair control module (TPT/XF-1250). AIM has four input channels and two network ports. Single size EUROCARD is adaptable to set all of the parts in the printed circuit board [2,3].

4.5 Performance of the control system

We use the Linear Variable Differential Transformer (LVDT) to detect the distance between the surface of the stage and the virtual plane made by water as shown in Figure 4. The virtual

plane is composed by a hydraulic circuit and three LSHFs. Leveling Sensor half-filled with water (LSHF) is insensitive to changing of temperature in the neighborhood [2, 6], then the detected three vertical points give an ideal reference plane to the stage. This plane is very useful to investigate the characteristics of the total feedback system on the active mover. Details of the digital feedback control for the present system is almost same as the reference [3]. We made a closed loop to keep the value (H + D) constant as described in Figure 4.

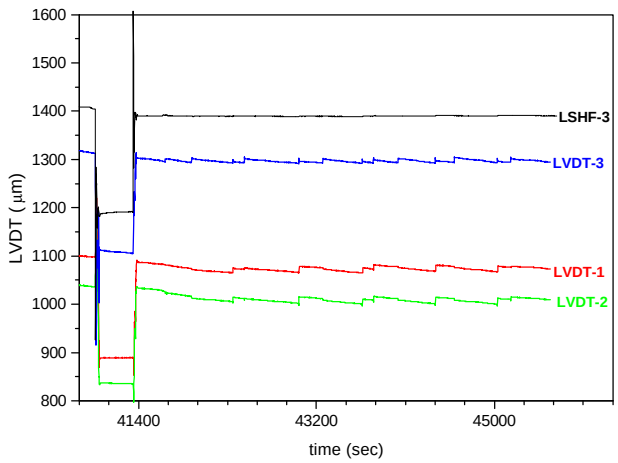

Fig. 8 Step response of the closed loop.

Figure 8 shows a step response. A step signal was made by vertically popping up/down a part of the hydraulic circuit. The closed loop system gives good responsibility for step disturbance as shown in Figure 8. The response time is about 4 sec. In contrast with the present response time, the response of the active supporting table of ATF is 10 minutes [3]. This long response time means that the feedback system includes undesirable time lag and its loop gain decreases. This slow time constant comes from its driving mechanism using a pulse motor [9]. On the other hand, the present mover is enough response time to control the slow ground motion and large loop gain becomes possible.

Small fluctuations ($\cong 5mm$) are found in Figure 8. These are originated by the temperature change around the stage. Minimum controllable pulse width of the present valve is 10 msec, which corresponds to $\cong 5mm$.

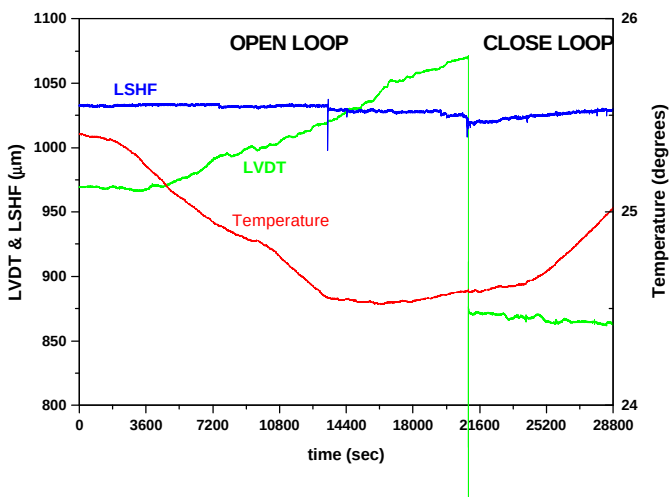

Fig. 9 Temperature dependence of the system.

Figure 9 shows the temperature effect of the system and reliable tracking characteristics of the feedback system for the reference, that is the level obtained by LSHF. We can also see in Figure 9 that LSHF is insensitive to the temperature change of surroundings [2]. In the case of open loop system, the surface plane of the stage becomes lower, that is increasing the signal of LVDT,

as the temperature falls. On the other hand, the surface position of the stage is locked to the level of LSHF as shown in Figure 9, in the region as marked CLOSE LOOP.

Two small jumps are found on the signal of LSHF. These correspond to the micro-ground motion or micro-earthquakes. A small step like jump has occurred 1.3 minutes before we set the close loop.

5. CONCLUSION

We can say that the air spring becomes a very useful actuator for the mover supporting the accelerator component. MLRB is also suitable damper because of its strongly directive stiffness. The present control system utilized the electro-magnetic valve for adjusting the height of the mover. We have to develop more precise component to fit the requirement of accelerator alignment. Our next step is to construct a half model of the girder for the accelerating structure and to develop an active supporting table for the Q-magnet.

6. REFERENCES

[1] T. Shintake, N. Akasaka, K. Kubo, H. Matumoto, S. Matsumoto, Shigeru Takeda, K. Oide and K. Yokoya, *C-band RF Main Linac System for e+e-Linear Colliders at 500 Gev to 1 Tev C.M. Energy*, 5th European Particle Accelerator Conference (EPAC96), Sitges, Barcelona Spain, KEK Preprint 96-69, July 1996 A.

[2] Shigeru Takeda, K. Kudo, Y. Funahashi, A. Akiyama and Y. Kanazawa, *Mslow Ground Motion and Alignment System*, 4th European Particle Accelerator Conference (EPAC94), London, KEK Preprint 94-48, June 1994 A.

[3] K. Kudo, Shigeru Takeda, Y. Funahashi and Y. Akiyama, *A Position feedback system using LON for the Active Supporting Table*, Proceedings of the 4th International Workshop on Accelerator Alignment (IWAA95), KEK, Tsukuba, Japan, November 1995.

[4] V. Shiltsev *Space-Time Ground Diffusion: The ATL Model for Accelerators*, Proceedings of the 4th International Workshop on Accelerator Alignment (IWAA95), KEK, Tsukuba, Japan, November 1995. Many references are there.

[5] A. Sery *Ground Motion Studies with Respect to Linac Performance*, Proceedings of LINAC96, CERN96-07 pp.621-625.

[6] Shigeru Takeda , N. Yamamoto and K. Oide *Ground Motion Studies for Large Future Linear Colliders*, the 1997 Particle Accelerator Conference, Vancouver, BC, Canada, May 1997, KEK Preprint 97-53, June 1997 A.

[7] M. G. Minty, C. Adolphsen, L. J. Hendrickson, R. Sass, T. Slaton, M. Woodley, *Feedback Performance at the Stanford Linear Collider, SLAC preprint*; M. Ross, *SLC Linac Vibration Study*, 6th International Workshop on Linear colliders (LC95), KEK Proceedings 95-5.

[8] K. Kubo and T. Shintake, *Alignment Issues for C-band Linear Collider*, 5th European Particle Accelerator Conference (EPAC96), Sitges, Barcelona Spain.

[9] Y. Funahashi, S. Araki, F. Hinode, K. Kudo, Shigeru Takeda Y. Takeuchi, J. Urakawa and M. Yoshioka, Proceedings of the 1994 International Linac Conference, August 21-26, 1994, Tsukuba, Japan.