DRAFT
January, 2006

Review of Feedback Basics

S. Heifets

January 20, 2006

1 Abstract

Basics of the feedback theory are presented.

2 Plan:

• Basic feedback:

closed and open loop transfer functions,

Nyquist criterion of stability.

• Longitudinal feedback:

cavity impedance,

steady state conditions, optimum conditions,

F.Pedersen's analysis

• Actual longitudinal feedbacks

• Transverse feedback.

3 Transfer functions of control system

Dynamics of a linear system is described by a system of linear diff. equations $\hat{L}_n(t)y(t) = U(t)$ of the n-th order,

$$\sum_{k=0}^{n} a_k \frac{d^k y(t)}{dt^k} = \sum b_k \frac{d^k u(t)}{dt^k},$$

where a_k, b_k are constants.

Laplace transform $y(t) -> \tilde{y}(s)$, $y(s) = \int_0^\infty f(t)e^{-st}$,

$$y(t) = \int_{\sigma - i\infty}^{\sigma + i\infty} \frac{ds}{2\pi i} \tilde{y}(s) e^{st},$$

gives for driven solution $\tilde{y}(s) = G_n(s)\tilde{u}(s)$, where $G_n(s)$ is *the transfer function*,

$$G(s) = \frac{\sum b_k s^k}{\sum_{k=0}^{n} a_k s^k} = |G(s)| e^{i\Phi(s)},$$

and the denominator is *characteristic polynomial.*

Single element: $T(s)$

Cascade (open loop transfer function):

$$a->b=Ga; b->c=Hb=GHa; T=c/a=GH;$$

Parallel elements: $T(s)=T_1(s)+T_2(s)$.

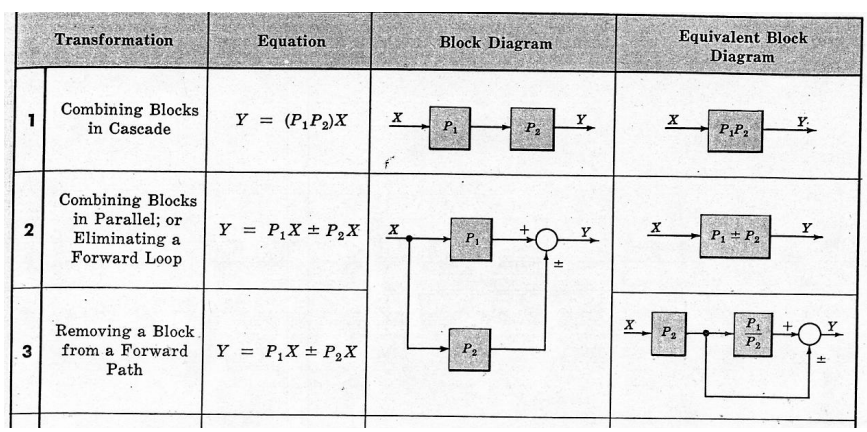

	Transformation	Equation	Block Diagram	Equivalent Block Diagram
1	Combining Blocks in Cascade	$Y = (P_1P_2)X$		
2	Combining Blocks in Parallel; or Eliminating a Forward Loop	$Y = P_1X \pm P_2X$		
3	Removing a Block from a Forward Path	$Y = P_1X \pm P_2X$		

Figure 1: Transfer function of a control system.

Feedback transfer function:

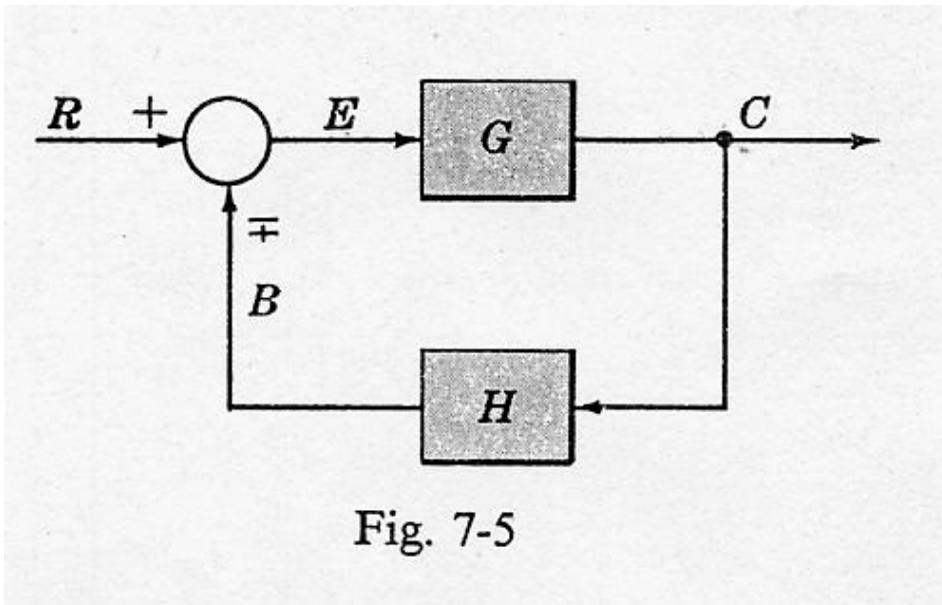

Figure 2: Schematic of the direct FB.

$$E = R - B;\ C = GE;\ B = HC = HGE;$$
$$E = R - HGE; E = \frac{R}{1+HG}; T = \frac{C}{R} = \frac{G}{1+HG}$$

Note: charact. polinomial GH is the open loop TF.

Note: Discrete feedback system:

$$y_n + by_{n-1} = a_0 x_n + a_1 x_{n-1}.$$

$b = 0$, finite impulse response filter (FIR),

$b \neq 0$, infinite response filter (IIR). Stable if $|b| < 1$.

3.1 Conditions of stability

The characteristic polynomial is

$$P_n(s) = \sum_{k=0}^{n} a_k s^k.$$

The eigen-values s_k, $k = 0, 1, .., n$ are the roots $P_n(s) = 0$.

Condition of stability $Re[s_k] < 0$.

Routh and Hurwitz conditions of stability: rules on combinations of coefficients a_k.

Nyquist stability criterion:

(don't confuse with the Nyquist criterion of sampling: sampling rate $\frac{1}{\Delta t} > 2\Delta f$):

Consider the transfer function in the form:
$T(s) = \frac{1}{1+GH(s)}$, where $GH(s)$ is open loop transfer function.

Use theorem: for $f(s) = 1 + GH(s)$, the integral

$$J = \frac{1}{2\pi i} \int_C \frac{f'(s)}{f(s)} ds;$$
$$J = P - Z = n_f(0) = n_{GH}(-1)$$

where P and Z are the number of poles/zeros within the contour C in s-plane, and $n_f(0)$ number of loops around the origin by the map $s \to f(s) = 1 + GH(s)$, or, the number of loops around -1 by $GH(s)$ in $Re[GH]$,$Im[GH]$ plane.

Criterion:

If $n_{GH}(-1) = P$, there are no zeros of $f(s)$, i.e. no poles of $T(s)$ with $Re(s) > 0$ and the system is stable.

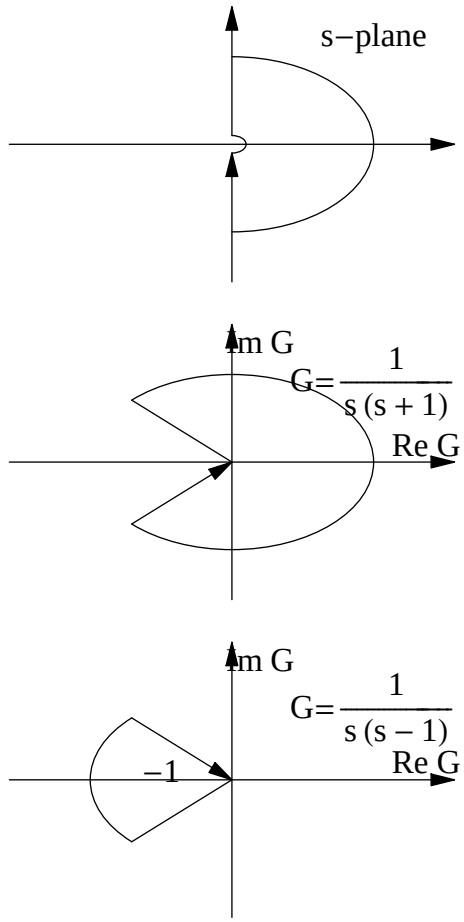

Figure 3: Nyquist criterion for transfer function $G(s)$: upper plot: $n = P = 0$, stable. Lower plot: $n = -1$, $P = 1$, unstable.

4 Low level feedback

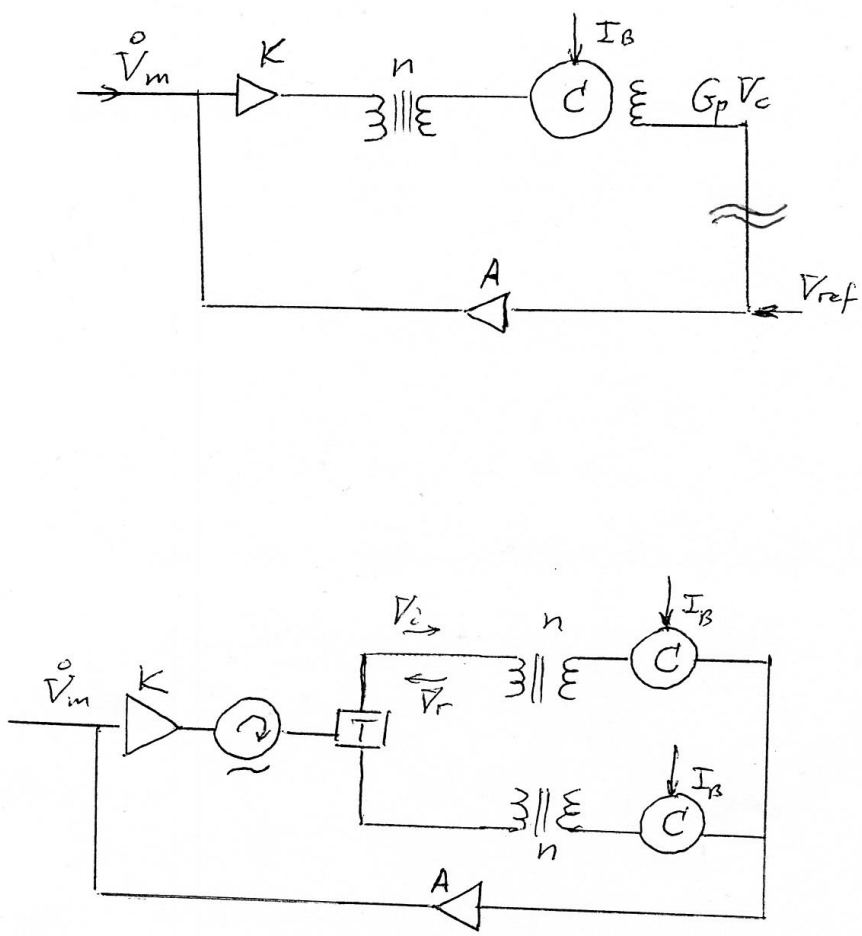

Figure 4: Basic direct loop of the cavity FB.

$$V_c = Z_c(I_g - I_{FB}), \;\; I_{FB} = \frac{V_c}{Z_A} = \frac{Z_c}{Z_A}(I_g - I_{FB}),$$

$$I_{FB} = \frac{Z_c}{Z_A}\frac{I_g}{1 + Z_g/Z_A}, \;\; V_c = \frac{I_g Z_c}{1 + Z_c/Z_A}$$

4.1 Cavity impedance

Impedance of a cavity including coupling $\propto \beta$ is given in terms of the loaded shunt impedance R_L and loaded Q_L-factor:

$$Z_c(\omega) = \frac{R_L}{1 + iQ_L(\omega_c/\omega - \omega/\omega_c)} \simeq \frac{R_L}{1 - 2iQ_L \frac{\omega - \omega_c}{\omega_c}},$$
$$R_L = \frac{R_0}{1+\beta}, \quad R_L = \frac{R_0}{1+\beta}, \quad Q_L = \frac{Q_0}{1+\beta}.$$

At $\omega = \omega_g$,

$$Z_c(\omega_g) = R_L \cos\psi e^{i\psi},$$
$$\tan\psi = Q_L(\frac{\omega_g}{\omega_c} - \frac{\omega_c}{\omega_g}).$$

4.2 Low-level FB transfer function

The effective impedance of the cavity with the direct FB:

$$V_c(\omega) = \frac{I_g Z_c}{1 + Z_c/Z_A} = \frac{I_g R_L}{1 - 2iQ_L \frac{(\omega-\omega_c)}{\omega_c} + G_{FB}(\omega)}.$$

$$G_{FB}(\omega) = \frac{R_L}{Z_A} = H(\omega)e^{-i\Phi(\omega)} \simeq H(\omega_c)e^{-i(\omega-\omega_c)\tau_d},$$
$$\simeq H_g\left(1 - i(\omega-\omega_c)\tau_d\right)$$

Hence,

$$Z_{eff} = \frac{R_H}{1 - 2iQ_H(\omega - \omega_c)/\omega_c},$$
$$R_H = \frac{R_L}{1 + H_g}, \quad Q_H = \frac{Q_L}{1 + H_g} + \frac{H_g}{1 + H_g}\,\frac{\omega_g \tau_d}{2}.$$

FB reduces R_L but increases the bandwidth of revolution harmonics affected by the cavity impedance.

Numbers: $Q_0 = 3.0\,10^4$, $Q_L = 6.6\,10^3$, $H_g \simeq 12$, $\tau_d = (380 + 150)$ ns, $\omega_g \tau_d/2 =\simeq 700$.

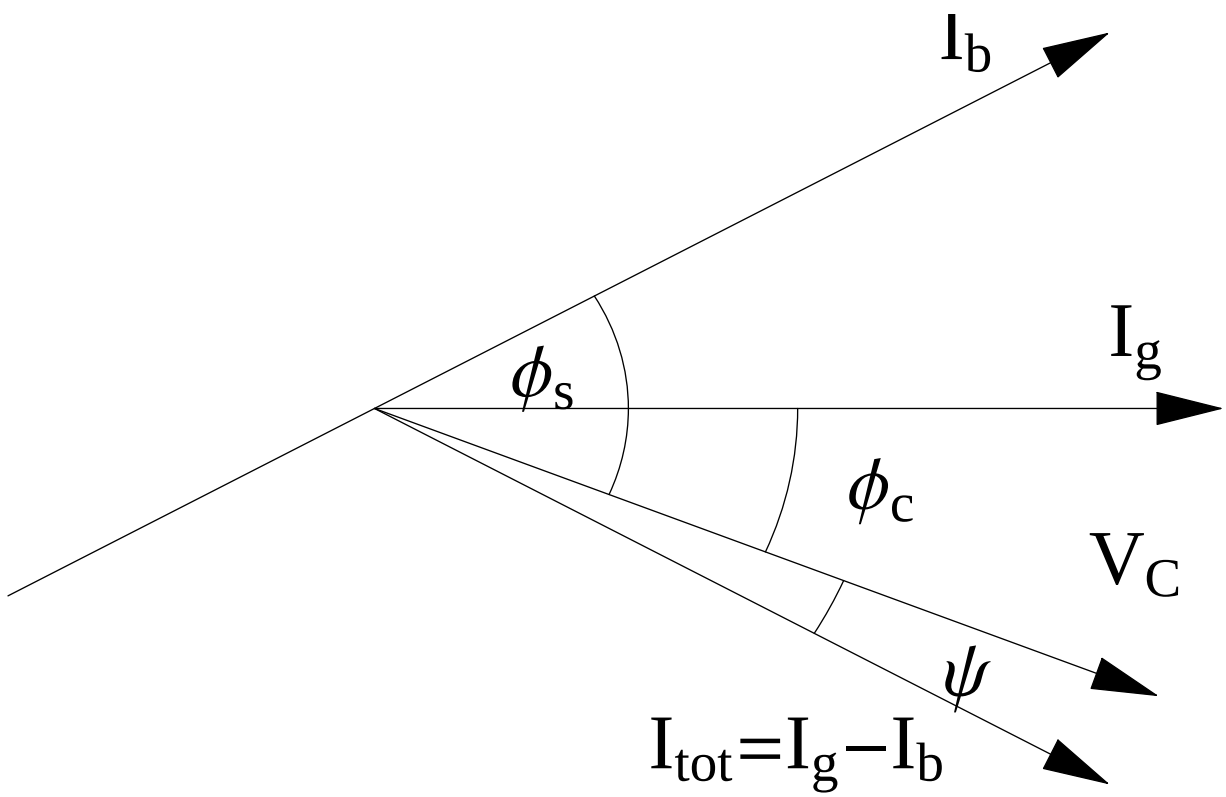

Figure 5: Phase notations.

4.3 Steady state of rf cavity: $\omega = \omega_g$, FB off

Total excitation current for a cavity: $I_{tot} = I_g - I_B$.

Define:

$$
\begin{aligned}
&I_{beam}(t) = 2I_{dc}\cos(\omega_g t + \phi_c - \phi_s) = \frac{1}{2}(\hat{I}_b e^{-i\omega_g t} + c.c.),\\
&\hat{I}_b = 2I_{dc}e^{i(\phi_s - \phi_c)}, \quad \hat{I}_b = Ibeam(\omega_g),\\
&V(t) = V_{cav}\cos(\omega_g t + \phi_c) = \frac{1}{2}(\hat{V}_c e^{-i\omega_g t} + c.c.),\\
&\hat{V}_c = V_{cav}e^{-i\phi_c}, \quad \hat{V}_c = Vcav(\omega_g)\\
&I_{gen}(t) = I_g\cos(\omega_g t) = \frac{1}{2}(\hat{I}_g e^{-i\omega_g t} + c.c.),\\
&\hat{I}_g = I_g, \quad \hat{I}_g = I_{gen}(\omega_g).
\end{aligned}
$$

I_{dc} is the average beam current, V_{cav} is maximum cavity voltage.

Then, defining $\hat{I}_{tot} = \frac{1}{2}(\hat{I}_{tot}e^{-i\omega_g t} + c.c.)$,

$$
\begin{aligned}
&\hat{I}_{tot} = \hat{I}_g - |\hat{I}_b|e^{i(\phi_s - \phi_c)},\\
&V_{cav}e^{-i\phi_c} = \hat{I}_{tot}R_L\cos\psi e^{i\psi}.
\end{aligned}
$$

Separating real and imaginary parts,

$$\hat{I}_g = |\hat{I}_B| \, \frac{\sin(\phi_s + \psi)}{\sin(\phi_c + \psi)}$$
$$\frac{1+\beta}{Y} = \cos\psi \frac{\sin(\phi_s - \phi_c)}{\sin(\phi_c + \psi)},$$

where $Y = \frac{2R_0 I_{dc}}{V_{cav}}$.

Accelerating voltage $V_{acc} = V_{cav}\cos(\phi_s)$.

β is defined by the cavity design (matching with the wave guide), $\beta \simeq 3.5$.

The phase ϕ_s is defined by the energy loss/turn: $V_c \cos(\phi_s) = U$.

The detuning angle ψ is given by $\tan\psi = 2Q_l(\omega_g - \omega_c)/\omega_c$.

4.3.1 Optimum conditions

Reflected power is zero provided $\phi_c = 0$ and $\hat{I}_g = \frac{2\beta}{R_0} V_c$. In this case

$$\beta = 1 + Y\cos\phi_s, \quad \tan\psi = \frac{\beta - 1}{\beta + 1}\tan\phi_s.$$

Example: Some LER PEP-II parameters:

$$E = 3.1\,GeV;\ f_0 = 136\,KHz; f_{rf} = 496\,MHz;$$
$$I_{dc} = 2.25\,A; V_{cav} = 0.85`\,MeV; n_{cav} = 6.;$$
$$N_b = 5.8125\,10^10\,; s_b = 124.`\,cm; \phi_s = 80.9^0;$$
$$\beta = 3.9;\ Y = 18.5;\ \tau_d = 450.0\,ns;\ \psi = 74.9^0;$$
$$\Delta f = -145.1\,KHz;\ f_s = 4.5\,KHz;\ Q_H = 6111.1;$$
$$U_{SR} = 0.76\,MeV;\ P_{forward/cavity} = 40.3\,kW$$

4.4 Robinson condition of stability

Energy gain leads to the shift $z < 0$, and I_{beam} get phase

$$I_{beam}(t) = 2I_{dc}\cos(\omega t + \phi_c - \phi_s + \frac{\omega_g z}{c}).$$

Hence, ϕ_s changes, $\phi_s \to \phi_s - \frac{\omega_g z}{c}$.

I_g, I_{dc}, ψ, β do not change. Therefore, ϕ_c and Y must change. For stability, the accelerating voltage $V_{acc} \propto (1/Y)\cos\phi_s$ has to change

$$d(\cos(\phi_s)/Y)d\phi_s < 0.$$

That, after some algebra, gives Robinson criteria of stability:

$$0 < \sin(2\psi) < 2(\frac{1+\beta}{Y})\sin\phi_s.$$

5 F. Pedersen's analysis of stability

Small variation around the steady-state:

$$\delta V_{cav}(t) = \frac{1}{2}\hat{V}_c e^{-i\omega_g t}[u(t) - i\Phi(t)],$$
$$\delta I_{tot}(t) = \frac{1}{2}\hat{I}_{tot} e^{-i\omega_g t}[a(t) - ip(t)],$$

where $u(t), \Phi(t), a(t), p(t)$ are slow functions of time.

Take Fourier transform: $a(t) -> a(\omega)$,
$a(t)e^{-i\omega_g t} -> a(\omega - \omega_g)$.

$$\delta V_c(\omega) = \frac{1}{2}\,\hat{V}_c\,[u(\omega - \omega_g) - i\Phi(\omega - \omega_g)],$$
$$\delta I_{tot}(\omega) = \frac{1}{2}\,\hat{I}_{tot}[a(\omega - \omega_g) - ip(\omega - \omega_g)].$$

Use $\hat{V}_c = Z_c(\omega_g)\hat{I}_{tot}$, $\delta V_c(\omega) = Z_c(\omega)\delta I_{tot}(\omega)$. Then,

$$u(\omega) - i\Phi(\omega) = \frac{Z_c(\omega + \omega_g)}{Z_c(\omega_g)}\,[a(\omega) - ip(\omega)].$$

In F. Pedersen notations (in Laplace transform), the transfer functions are:

$$\tilde{u}(s) = G_{aa}\tilde{a}(s) + G_{ap}\tilde{p}(s),$$
$$\tilde{\Phi}(s) = G_{pa}\tilde{a}(s) + G_{pp}\tilde{p}(s),$$

where

$$G_{aa} = G_{pp} = Re[\frac{\tilde{Z}_c(s - i\omega_g)}{\tilde{Z}_c(-i\omega_g)},$$
$$G_{ap} = -G_{pa} = Im[\frac{\tilde{Z}_c(s - i\omega_g)}{\tilde{Z}_c(-i\omega_g)}.$$

To close the system, define

$$\delta I_{tot}(t) = \delta I_{gen}(t) - \delta I_{FB}(t) - \delta I_B(t).$$

The beam current at s_{cav}

$$I_{beam}(t) = \frac{I_{dc}}{n_b c T_0} \sum_{n=1}^{n_b} \delta(ct - n s_b + \zeta_n - s_{cav})$$
$$= \frac{I_{dc}}{n_b} \sum_n \sum_k e^{\frac{2\pi i k}{C}(ct - n s_b + \zeta_n - s_{cav})}$$

Retain harmonics $k = \pm n_b$ and put $\zeta_n = z(t)$, (i.e. $m = 1$ mode) and $s_{cav} = 0$:

$$I_{beam}(t) = I_{dc} e^{-i(\omega_g t + \frac{\omega_g \zeta}{c})} + c.c.$$

In the linear approximation over ζ,

$$\delta I_b(t) = -i I_{dc} e^{-i\omega_g t} \left(\frac{\omega_g \zeta(t)}{c}\right) + c.c.$$

Consider the beam dynamics with n_{cav} cavities in the ring:

$$\frac{d^2\zeta(t)}{dt^2} + \omega_s^2\zeta(t) = -\frac{\alpha c\omega_0 n_{cav} e\delta V_c(t)}{2\pi E}.$$

Note, δV_c is taken at the arrival time $t_b = \{(\phi_s - \phi_c)/\omega_g - \zeta(t_b)/c\}mod[T_{rev}]$ and here it can be written as $\delta V_{cav}(t) = \frac{1}{2}\hat{V}_c[u(t) - i\Phi(t)]$. That makes certain that $\zeta(t)$ is slow function of t. In frequency domain:

$$\zeta(\omega) = -\frac{\alpha c\omega_0 n_{cav}}{4\pi E}\,\frac{e\hat{V}_c[u(\omega) - i\Phi(\omega)]}{\omega_s^2 - \omega^2}.$$

For $\omega \simeq \omega_g$,

$$\delta I_{beam}(\omega) = i\frac{\alpha\omega_g n_{cav}\omega_0}{4\pi E}\,\frac{e\hat{V}_c I_{dc}[u(\omega - \omega_g) - i\Phi(\omega - \omega_g)]}{\omega_s^2 - (\omega - \omega_g)^2}.$$

The Fourier component of the FB current

$$\delta I_{FB}(\omega) = G_{FB}(\omega)\delta V_c(\omega),$$
$$R_L G_{FB}(\omega) = H_g[1 - i(\omega - \omega_c)\tau_d].$$

Using $\hat{V}_c = Z_c(\omega_g)\hat{I}_{tot}$ and the definition

$$\delta I_{tot}(\omega) = \frac{1}{2}\hat{I}_{tot}[a(\omega-\omega_g) - ip(\omega-\omega_g)],$$
$$= \delta I_{gen}(\omega) - \delta I_{FB}(\omega) - \delta I_B(\omega),$$

we get

$$a(\omega) - ip(\omega) = \frac{2\delta I_{gen}(\omega+\omega_g)}{\hat{I}_{tot}}$$
$$-\frac{H_g}{R_L}\left[1 - i(\omega+\omega_g-\omega_c)\tau_d\right] Z_c(\omega_g)\left[u(\omega) - i\Phi(\omega)\right]$$
$$-i\frac{\omega_s^2}{2\sin\phi_s}\,\frac{Z_c(\omega_g)|\hat{I}_b|}{V_{cav}}\,\frac{[u(\omega) - i\Phi(\omega)]}{\omega_s^2 - \omega^2}.$$

That can be written using $\hat{I}_b = 2I_{dc}e^{i(\phi_s-\phi_c)}$, and $Y = \frac{2R_0 I_{dc}}{V_{cav}}$ in the form

$$
\begin{aligned}
a(\omega) - ip(\omega) &= \frac{2\delta I_{gen}(\omega+\omega_g)}{\hat{I}_{tot}} - T(\omega)\left[u(\omega) - i\Phi(\omega)\right], \\
T(\omega) &= \cos(\psi)e^{i\psi}\left[H_g\left(1 - i(\omega+\omega_g-\omega_c)\tau_d\right)\right. \\
&+ \frac{i\omega_s^2 Y}{2(1+\beta)\sin\phi_s}\,\frac{e^{i(\phi_s-\phi_c)}}{\omega_s^2-\omega^2},
\end{aligned}
$$

where, for n_{cav} cavities

$$
\omega_s^2 = \frac{\alpha\omega_g\omega_0 e V_{cav} n_{cav}\sin(\phi_s)}{2\pi E}.
$$

The system of homogeneous equations

$$
\begin{aligned}
a(\omega) - ip(\omega) &= -T(\omega)[u(\omega) - i\Phi(\omega)], \\
u(\omega) - i\Phi(\omega) &= \frac{Z_c(\omega+\omega_g)}{Z_c(\omega_g)}\left[a(\omega) - ip(\omega)\right].
\end{aligned}
$$

define eigenvalues ω. The system is stable if all eigenvalues are in the lower half plane of ω.

The system can be written as the cubic equation for $x = \omega/\omega_s$:

$$(1-2ix\,\frac{\omega_s Q_H}{\omega_g}-i\frac{Q_H}{Q_L}\tan\psi)\,(x^2-1) = \frac{iY}{2(1+\beta)(1+H_g)\sin(\phi_s)}$$

As it was shown above, parameters Y and ϕ_c are related,

$$\frac{1+\beta}{Y} = \cos\psi\frac{\sin(\phi_s-\phi_c)}{\sin(\phi_c+\psi)}.$$

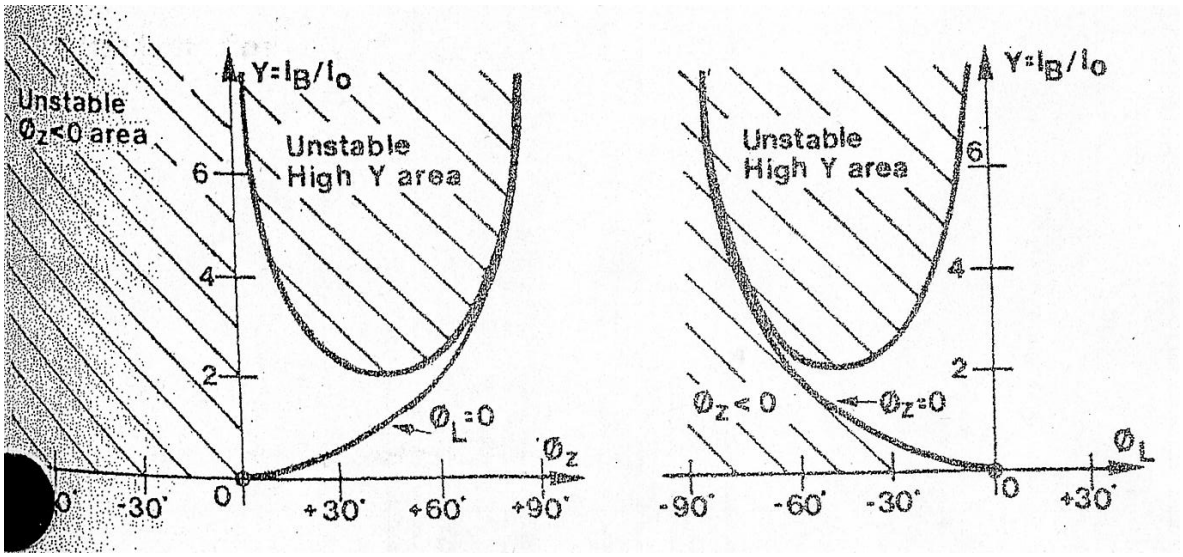

Figure 6: Stability diagram (F. Pedersen).

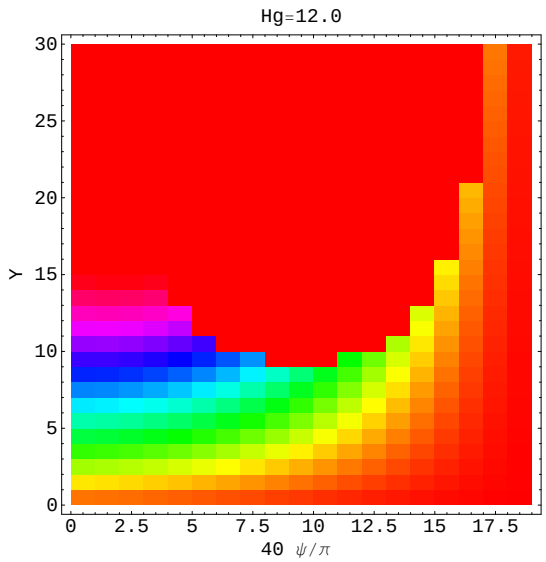

Figure 7: Stability diagram, see equation in the text.

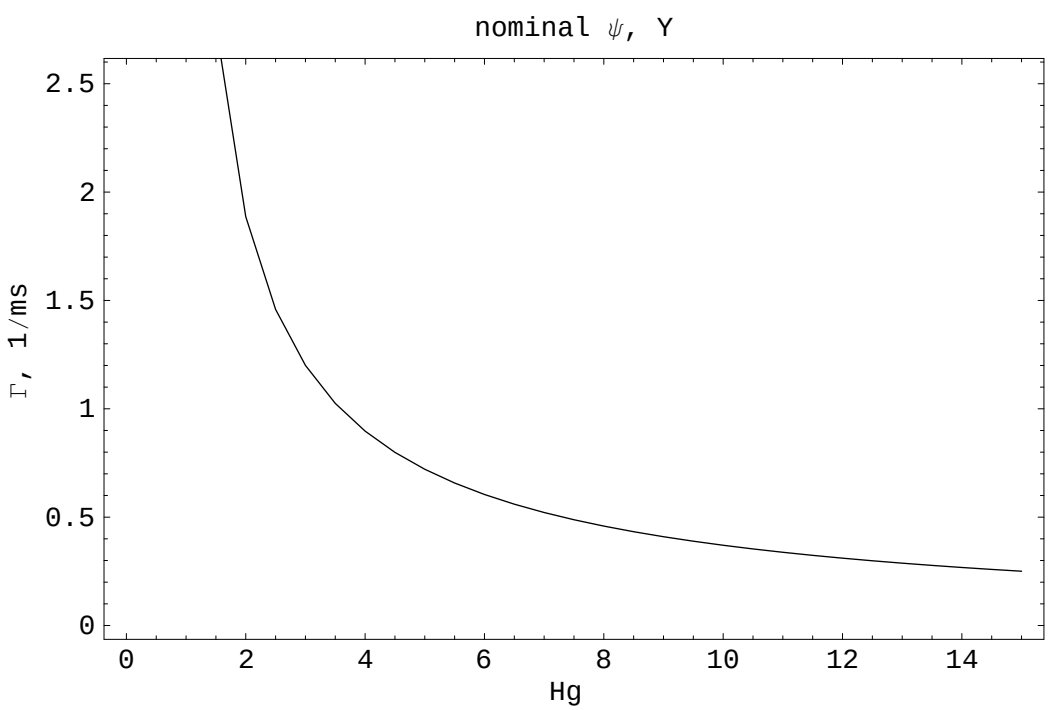

Figure 8: Growth rate vs FB gain H_g.

6 Full longitudinal FBs

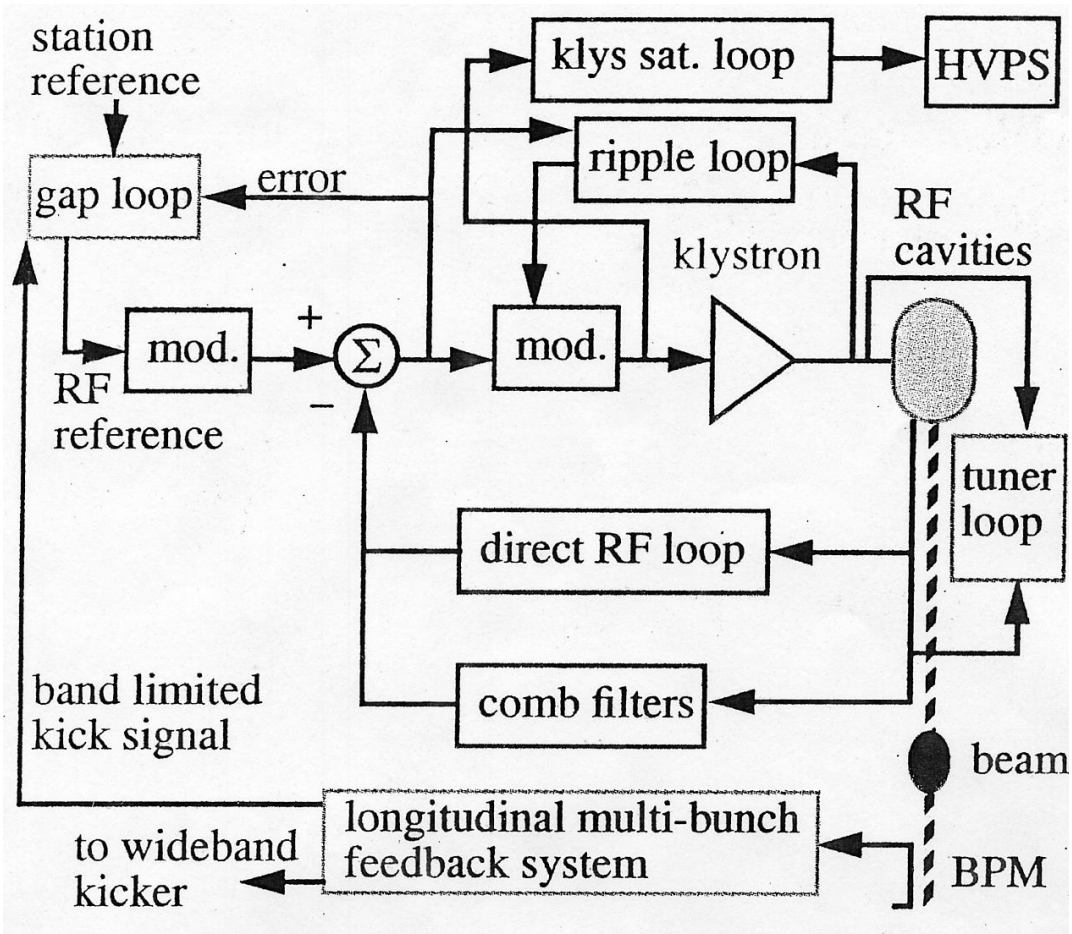

Figure 9: Full longitudinal feedback system.

6.1 Comb filter

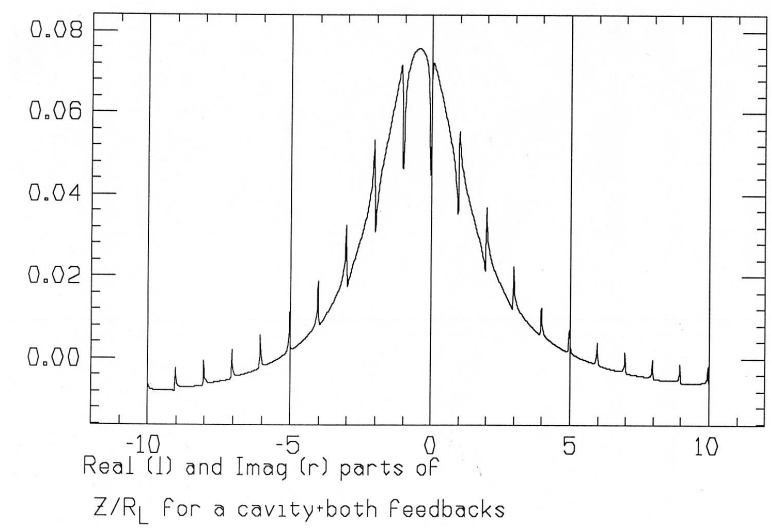

Figure 10: Real part of the transfer function of the comb filter.

6.2 Other loops

Tuner loop: minimize reflected power

Klystron saturation loop: control of the klystron operating point

ripple loop: adjust modulator to maintain constant gain/phase shift through modulator/klystron system

Gap FB loop: removes revolution harmonics from FB error signal to avoid saturation of the klystron

Woofer link: use the cavity as a kicker for low frequency modes

6.3 Noise of the FB

For longitudinal FB, see S.H. +A. Chao
SLAC-PUB-10167 (2003)

7 Bunch-by-bunch longitudinal FB

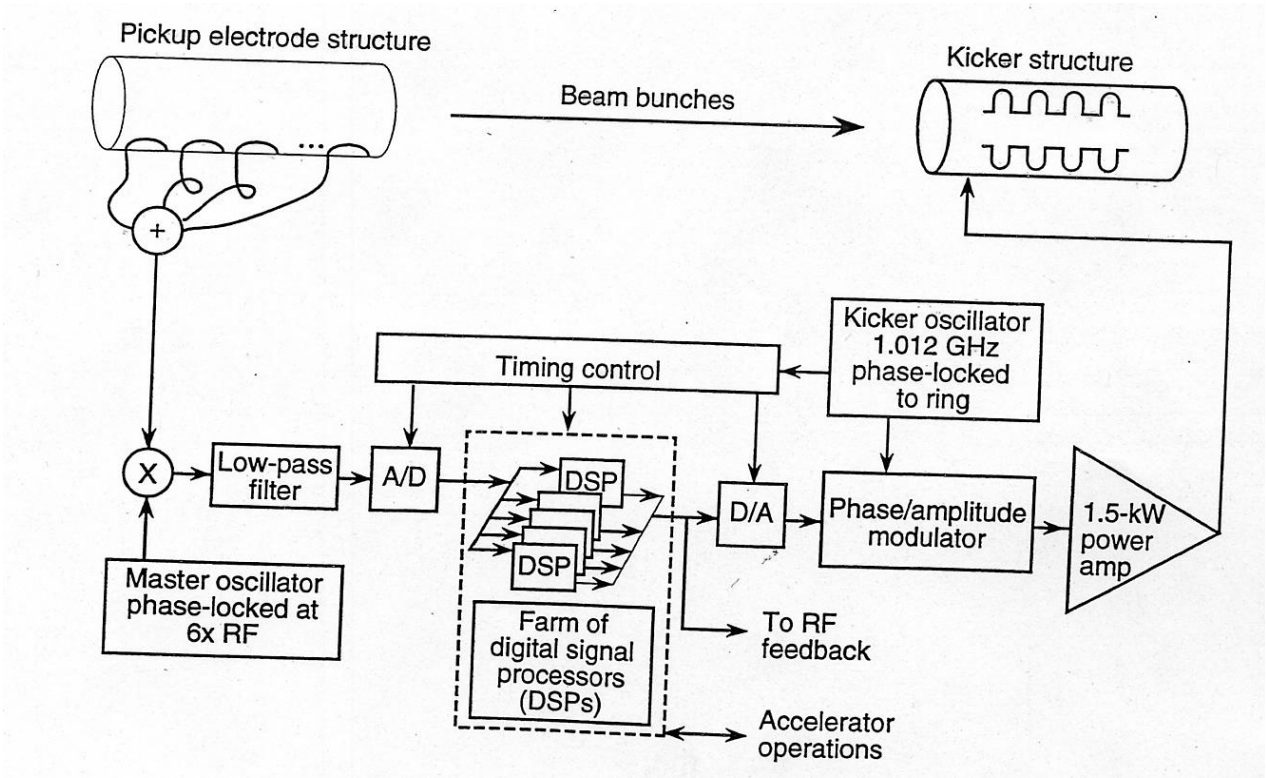

Figure 11: Schematic of the bunch-by-bunch longitudinal FB.

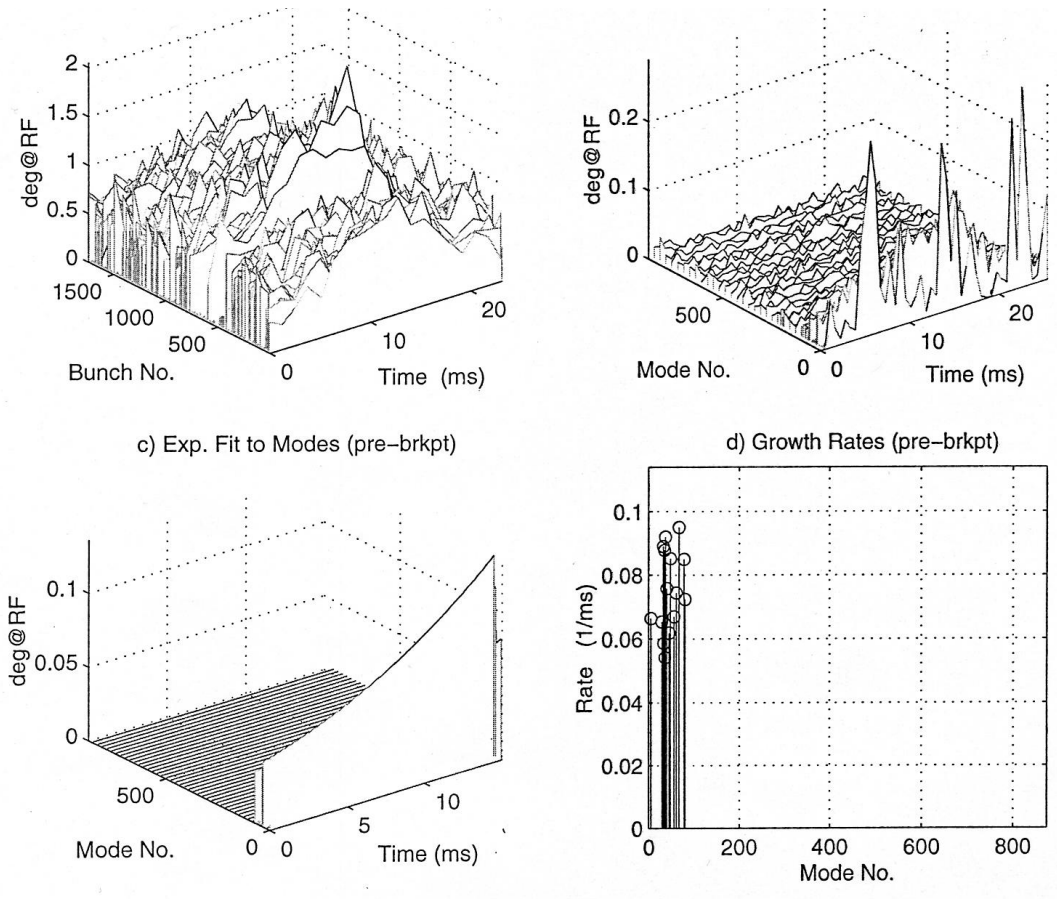

Figure 12: Diagnostics with the bunch-by-bunch longitudinal FB.

8 Transverse FB

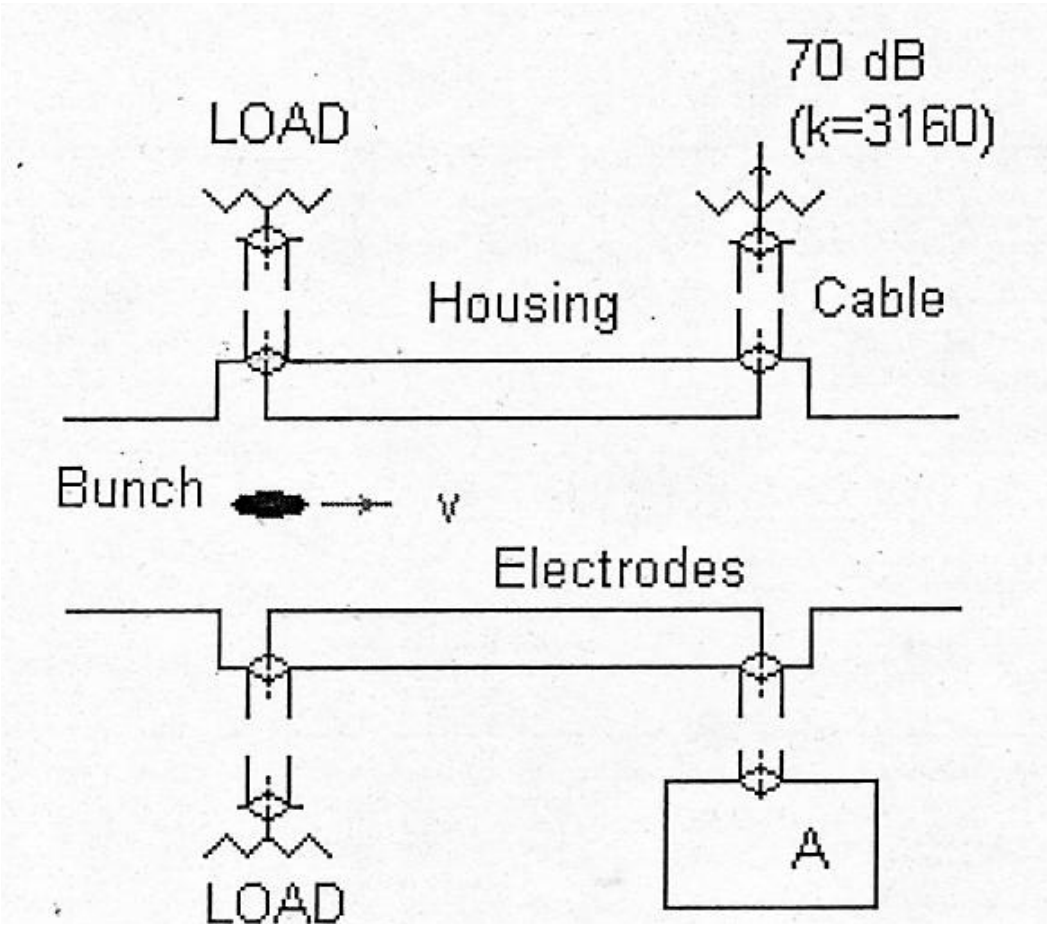

Figure 13: Schematics of the transverse FB.

However: Gproto may eliminate the DSP